PROPRIETARY DATA

PROPERTY OF ACE ROTO-MOLD MFG., INC. INFORMATION FURNISHED HEREIN IS THE PROPERTY OF ACE ROTO-MOLD MFG., INC AND SHALL NOT BE USED, DISCLOSED TO OTHERS, OR COPIED WITHOUT THE EXPRESSED WRITTEN CONSENT OF ACE ROTO-MOLD MFG., INC. ALL RIGHTS RESERVED.

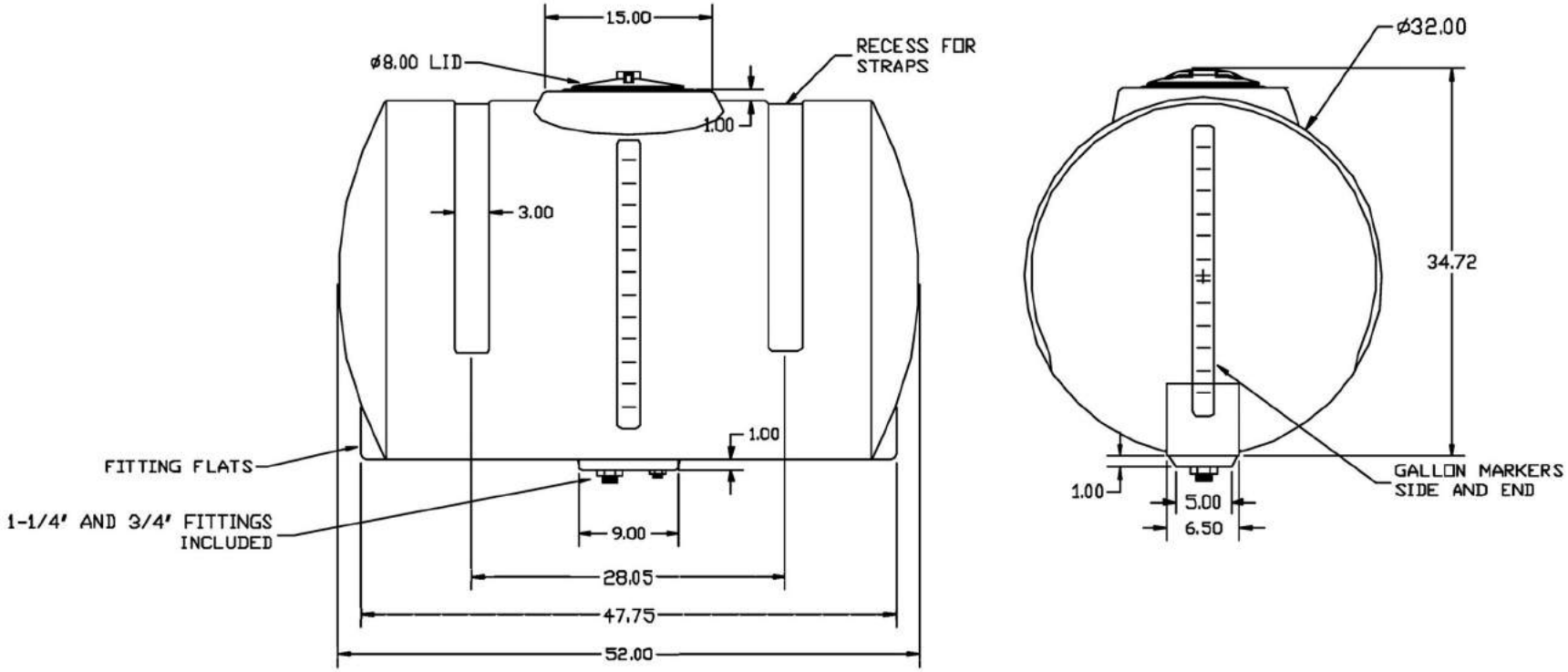

REV	DESCRIPTION	DATE	APPRD

ALL DIMENSIONS ARE IN DECIMAL INCHES
TOLERANCES UNLESS OTHERWISE SPECIFIED
± 1% @ 68° F

DRAWN / DATE
NVE 6/8/15

APPRD. / DATE
DHJ 6/21/15

THIRD ANGLE PROJECTION
ANSI Y14.5M

MATERIAL

HDPE OR EQUIVELENT
REFERENCE MATERIAL DATA SHEET
FOR SPECIFIC PROPERTIES.

NOTES:

1. NOM. WALL @ .211
2. WHITE OR COLOR
3. SHOT WEIGHT 48 LBS.

CLIENT / DESCRIPTION

SCALE N.S.

PART NO.

APA150-32

(866) 776-8265 PROTANK sales@protank.com