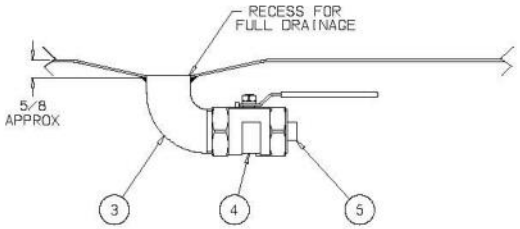


VALVE ASSEMBLY DETAIL
SCALE: NONE

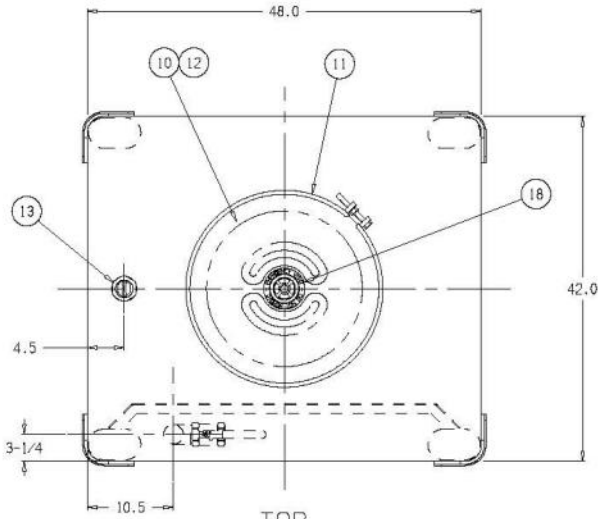


TOP

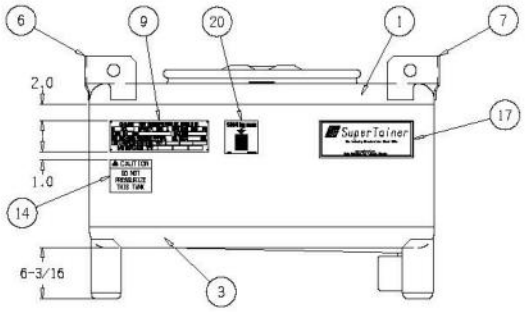


LEFT SIDE

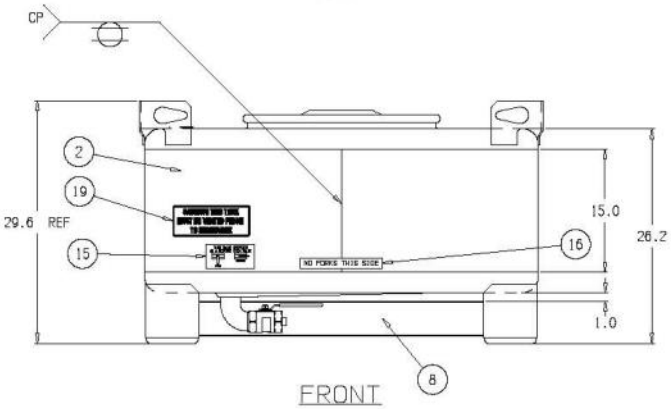


FRONT

| REVISION | | | | |
|---|---|---|---|---|
| NO. | DATE | DESCRIPTION | BY | APPD. |
| a | 04/10/2009 | CHANGE PART 3 | WRB | |
| b | 05/25/2010 | FITTING DIMENSION LOCATION CHANGED FROM 6" TO 4-1/2" | JCB | LT |
| c | 06/30/2010 | ADDED CAUTION DECAL | JCB | LT |
| d | 11/18/2010 | ADDED IBC STACKING DECAL | JCB | |

NOTES:

1. TANK IS DESIGNED AND CONSTRUCTED IN ACCORDANCE WITH U.N. SPECIFICATIONS
2. TANK IS AIR TESTED AT 3 PSI
3. ALL WELDS CLEANED OF SLAG AND SPATTER
4. TANK INTERIOR AND EXTERIOR ARE ELECTRO-CLEANED
5. DRUM LID TO BE INSTALLED BY: STRIKE RING AROUND CIRCUMFERENCE WITH A MALLET THEN TIGHTEN THE BOLT WITH A WRENCH. REPEAT UNTIL BOLT TIGHTENING RESISTANCE DOES NOT CHANGE (REF: 40 LB-FT)
6. 2IN BUNG TO BE INSTALLED 3/8 TO 1/2 ROTATION BEYOND SOLID GASKET CONTACT (REF: 30 LB-FT)

| NO. | QTY. | PART NUMBER | DESCRIPTION |
|---|---|---|---|
| 21 | | | |
| 20 | 1 | 99700354 | IBC STACKING DECAL - 1344KG [165 SUPERTAINER] |
| 19 | 1 | 99700315 | DECAL CAUTION VENT PRIOR TO DISCHARGE |
| 18 | 1 | 99700246 | DECAL EMERGENCY VENT |
| 17 | 1 | 99700260 | DECAL SUPERTAINER |
| 16 | 1 | 99700247 | DECAL NO FORKS THIS SIDE |
| 15 | 1 | 99700248 | DECAL REVERSE STEM VALVE OPEN/CLOSE |
| 14 | 1 | 99700258 | DECAL DO NOT PRESSURIZE |
| 13 | 1 | 35901511 | PLUG 2IN HEX HEAD WH EPDM GASKET 304SS |
| 12 | 1 | 33100387 | GASKET 22-5/16 DIA MULTIPURPOSE EPDM |
| 11 | 1 | 34701360 | ASM BOLTED CLAMP RING 22-5/16 ZINC-PLTD |
| 10 | 1 | 35901163 | LID 22-5/16 DOT 16GA W/RIEKE 304SS |
| 9 | 1 | 36500069 | PLATE UN SUPERTAINER 304SS DWG#B4462 |
| 8 | 1 | 35901173 | VALVE GUARD 4-1/4 X 43-1/2 X 10GA 304SS |
| 7 | 2 | 35901455 | LIFTING LUG L 304SS |
| 6 | 2 | 35901454 | LIFTING LUG R 304SS |
| 5 | 1 | 34200833 | PLUG PVC 2IN NPT SQ HD |
| 4 | 1 | 35400242 | VALVE 2IN REV-STEM BV LOCK-HNDL 316SS S[] |
| 3 | 1 | 35902034 | ASM BTM 42 X 48 X 10GA W/LEGS & SWEEP EL 304SS |
| 2 | 2 | 33800141 | SHELL 15 X 42 X 48WS X 10GA W/PVC 304SS |
| 1 | 1 | 35902036 | ASM TOP 42 X 48 X 10GA W/2IN WP 304SS |

BILL OF MATERIALS

CUSTOMER:

JOB:

| | | |
|---|---|---|
| SCALE: 1:10 | APPROVED BY: | DRAWN BY: JCB |
| DATE: 10/07/2008 | | CHECKED BY: LT |
| DESCRIPTION: 165 GAL 42 X 48 SUPERTAINER SS | | DRAWING NUMBER: 21397d |

**IBCS165R**

(866) 776-8265 PROTANK sales@protank.com